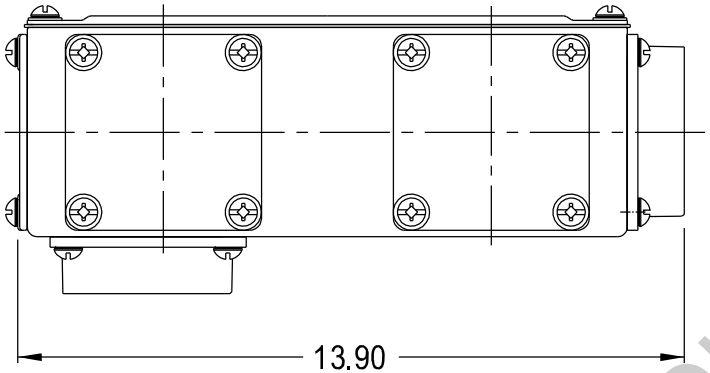

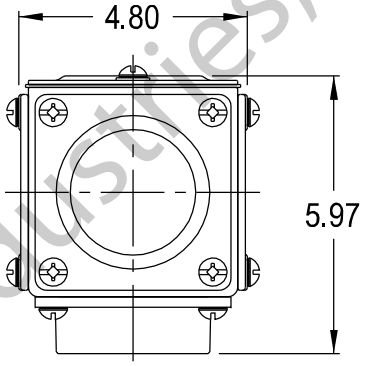

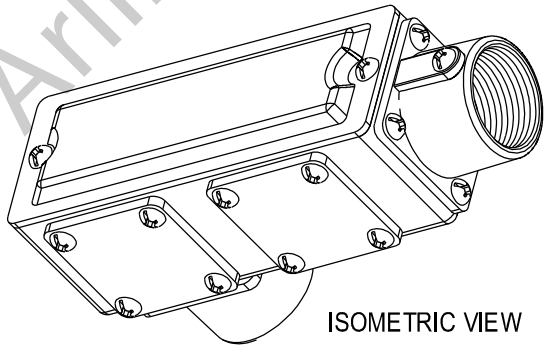

ISOMETRIC VIEW
(SCALE: NONE)

© 2012 Arlington Industries, Inc.