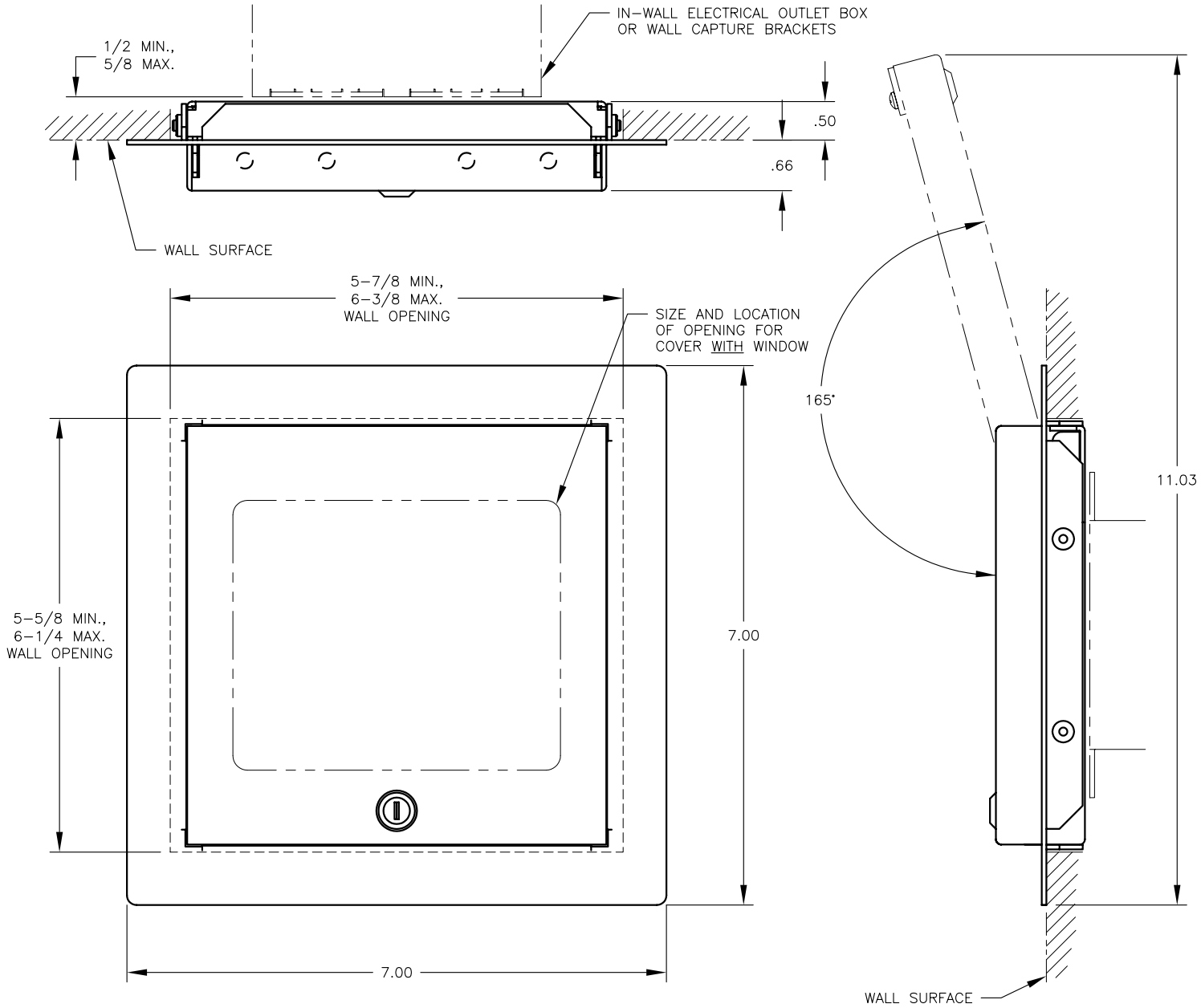

MAXIMUM WALLPLATE SIZE: 4.93 HIGH x 4.79 WIDE.

FSR inc.
244 BERGEN BLVD.
W. PATERSON, NJ 07424
TEL. (973) 785-4347
FAX (973) 785-3318

TITLE: WB-PR2G/WB-MR2G (2-GANG RECESSED)

DRAWN BY: JRE	DATE: 06/30/06	REV: –
DWG#: WBPR2G-MR2G	PAGE: 1 OF 1	SCALE: 1:2